SCHEMATIC MULTI-LINE
MP& CB
QTY=1PCS

REFERENCE DOCUMENTS	DOC No.

NOTES :

LEGEND:

REV.	DATE	DESCRIPTION	PREP.	CHK.	APPR.
01					
00	8/21/2023		SFG	SFG	M.GHAREDAGHI

CLIENT:

SUB CONTRACTOR(S): Bonyan Tablo

DRAWING TITLE:

MAHAN PROJECT

Title page / cover sheet

PREP.: SFG | CHECK.: SFG | APPR.: M.GHAREDAGHI

CONT. JOB No.: | CONT. DWG. No.:

REF. NO.: | SC.:

PANEL NAME: MPB& CB

DOCUMENT No.: | SIZE: A3

PLAN/PRJ/SUB.:	UNIT CODE	PHASE	SERIAL NO.:	REV.:	SHEET NO.
			PR-SA-152-247	00	

REFINERY DOC. NO.	LOCATION	SIZE	CLASS	SERIAL NO.

= H

+ M01

1/ 254

Table of contents

Column X: An automatically generated page was edited

F06_001

Page	Page description	supplementary page field	Date	Edited by	X
=H+M01/1	Title page / cover sheet		8/27/2023	SFG	X
=H+M01/2	GENERAL SPECIFICATION		8/26/2023	SFG	X
=H+M01/3	Table of contents : =H+M01/1 - =H+M01/17		8/27/2023	SFG	
=H+M01/3.a	Table of contents : =H1+M01/2 - =H1+M01/3		8/27/2023	SFG	
=H+M01/3.b	Table of contents : =H3+M01/1 - =H3+M01/5		8/27/2023	SFG	
=H+M01/4	INCOMING & METERING		8/27/2023	SFG	
=H+M01/5	SPD		8/27/2023	SFG	
=H+M01/6	OUTGOING		8/27/2023	SFG	
=H+M01/7	OUTGOING		8/27/2023	SFG	
=H+M01/8	OUTGOING		8/27/2023	SFG	
=H+M01/9	CB		8/27/2023	SFG	
=H+M01/10	CB		8/27/2023	SFG	
=H+M01/11	CB		8/27/2023	SFG	
=H+M01/16	LIGHTING		8/27/2023	SFG	
=H+M01/17	LIGHTING		8/27/2023	SFG	

Table of contents

Column X: An automatically generated page was edited

F06_001

Page	Page description	supplementary page field	Date	Edited by	X
=H3+M01/1	Title page / cover sheet		8/27/2023	SFG	X
=H3+M01/2	GENERAL SPECIFICATION		8/27/2023	SFG	X
=H3+M01/4	LAYOUT		8/27/2023	SFG	
=H3+M01/5	LAYOUT		8/27/2023	SFG	

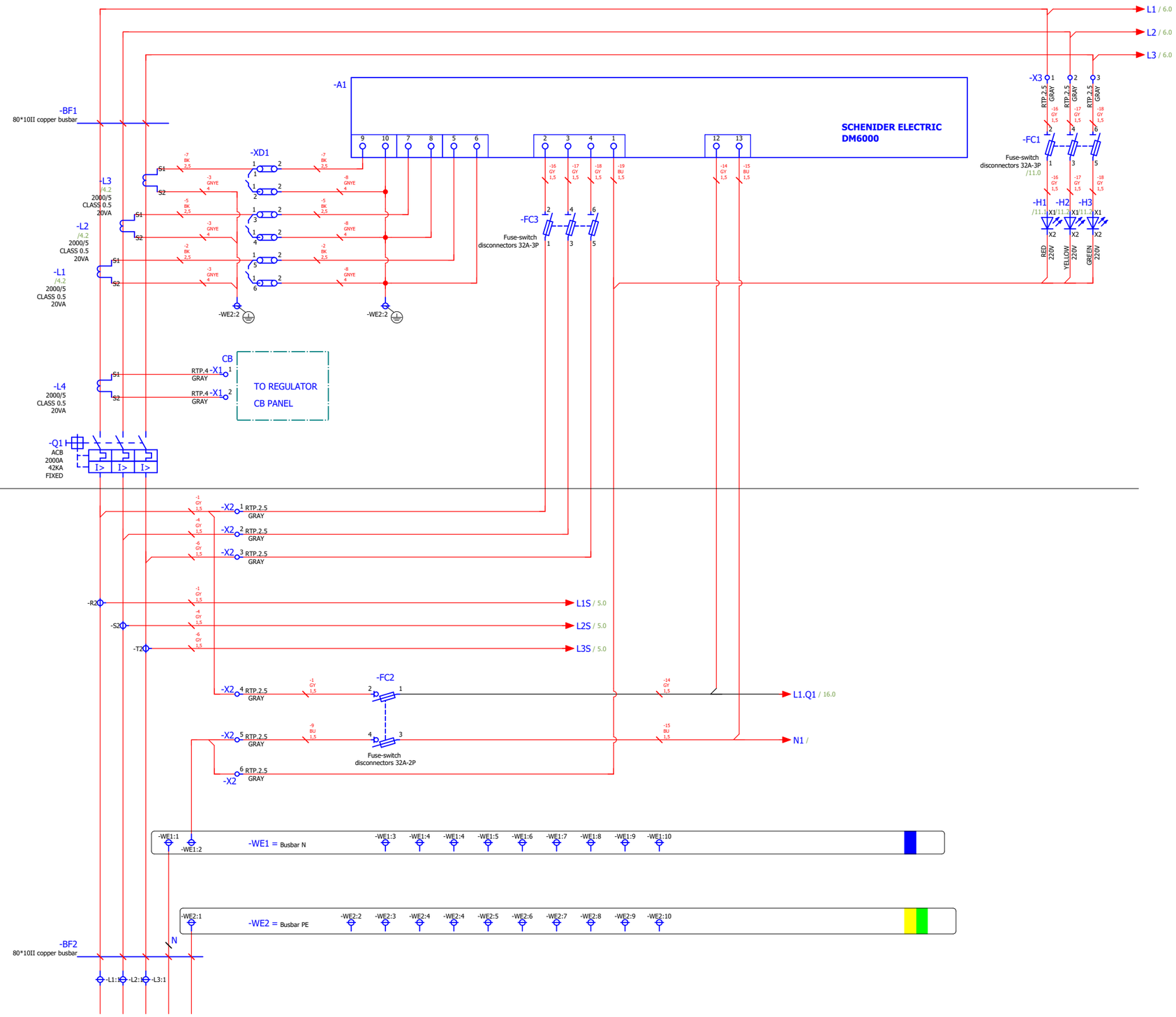

CAUTION!

Remains energized when main switch is opened

FEEDER NUMBER	00
FEEDER NAME	INCOMING
DESCRIPTION	-
	-

REFERENCE DOCUMENTS	DOC No.

NOTES :

LEGEND:

REV.	DATE	DESCRIPTION	PREP.	CHK.	APPR.
01					
00	8/21/2023		SFG	SFG	M.GHAREDAGHI

CLIENT:

SUB CONTRACTOR(S): Bonyan Tablo

DRAWING TITLE:

MAHAN PROJECT

INCOMING & METERING

PREP.: SFG | CHECK.: SFG | APPR.: M.GHAREDAGHI

CONT. JOB No.: | CONT. DWG. No.:

REF. NO.: | SC.:

PANEL NAME: MPB& CB

DOCUMENT No.: | SIZE: A3

PLAN/PRJ/SUB.:	UNIT CODE	PHASE	SERIAL NO.:	REV.:	SHEET NO.
			PR-SA-152-247	00	

REFINERY DOC. NO.	LOCATION	SIZE	CLASS	SERIAL NO.

= H

+ M01

4/ 254

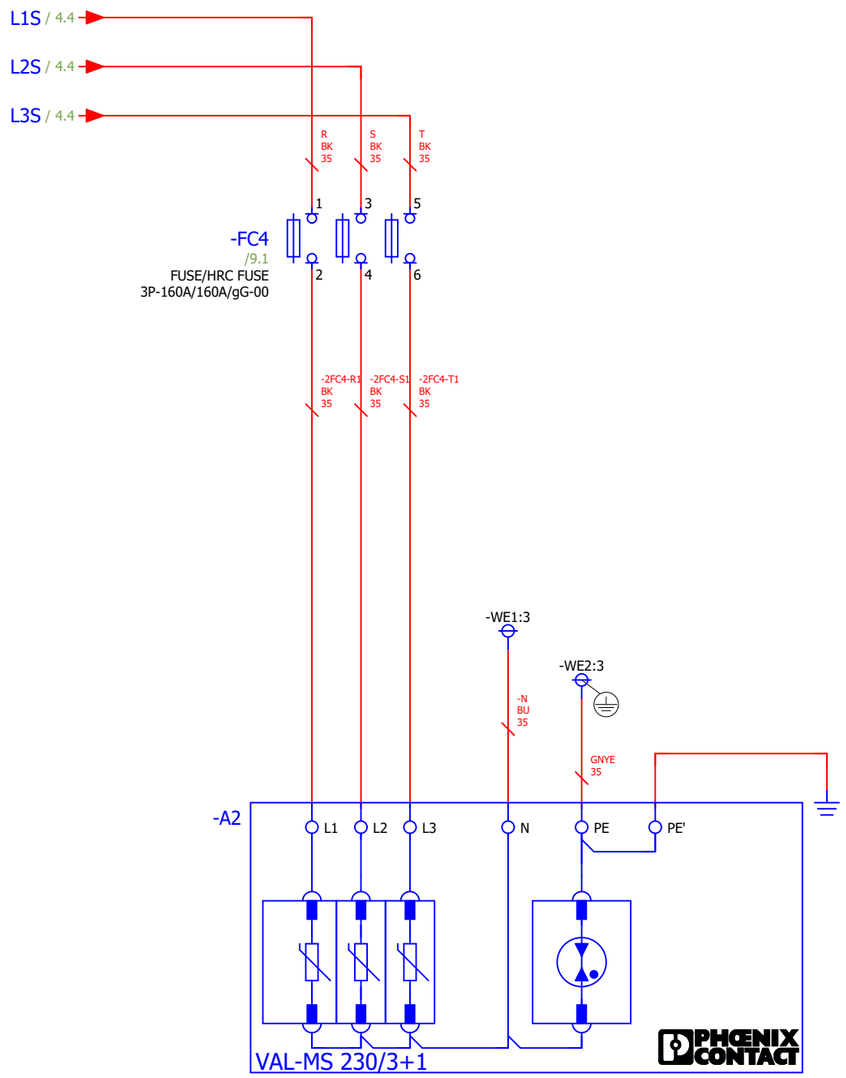

REFERENCE DOCUMENTS	DOC No.

NOTES :

LEGEND:

REV.	DATE	DESCRIPTION	PREP.	CHK.	APPR.
01					
00	8/21/2023		SFG	SFG	M.GHAREDAGHI

CLIENT:

SUB CONTRACTOR(S): Bonyan Tablo

DRAWING TITLE:

MAHAN PROJECT

SPD

PREP.: SFG | CHECK.: SFG | APPR.: M.GHAREDAGHI

CONT. JOB No.: | CONT. DWG. No.:

REF. NO.: | SC.:

PANEL NAME: MPB& CB

DOCUMENT No.: | SIZE: A3

PLAN/PRJ/SUB.:	UNIT CODE	PHASE	SERIAL NO.:	REV.:	SHEET NO.
			PR-SA-152-247	00	

REFINERY DOC. NO.	LOCATION	SIZE	CLASS	SERIAL NO.

= H

+ M01

5/ 254

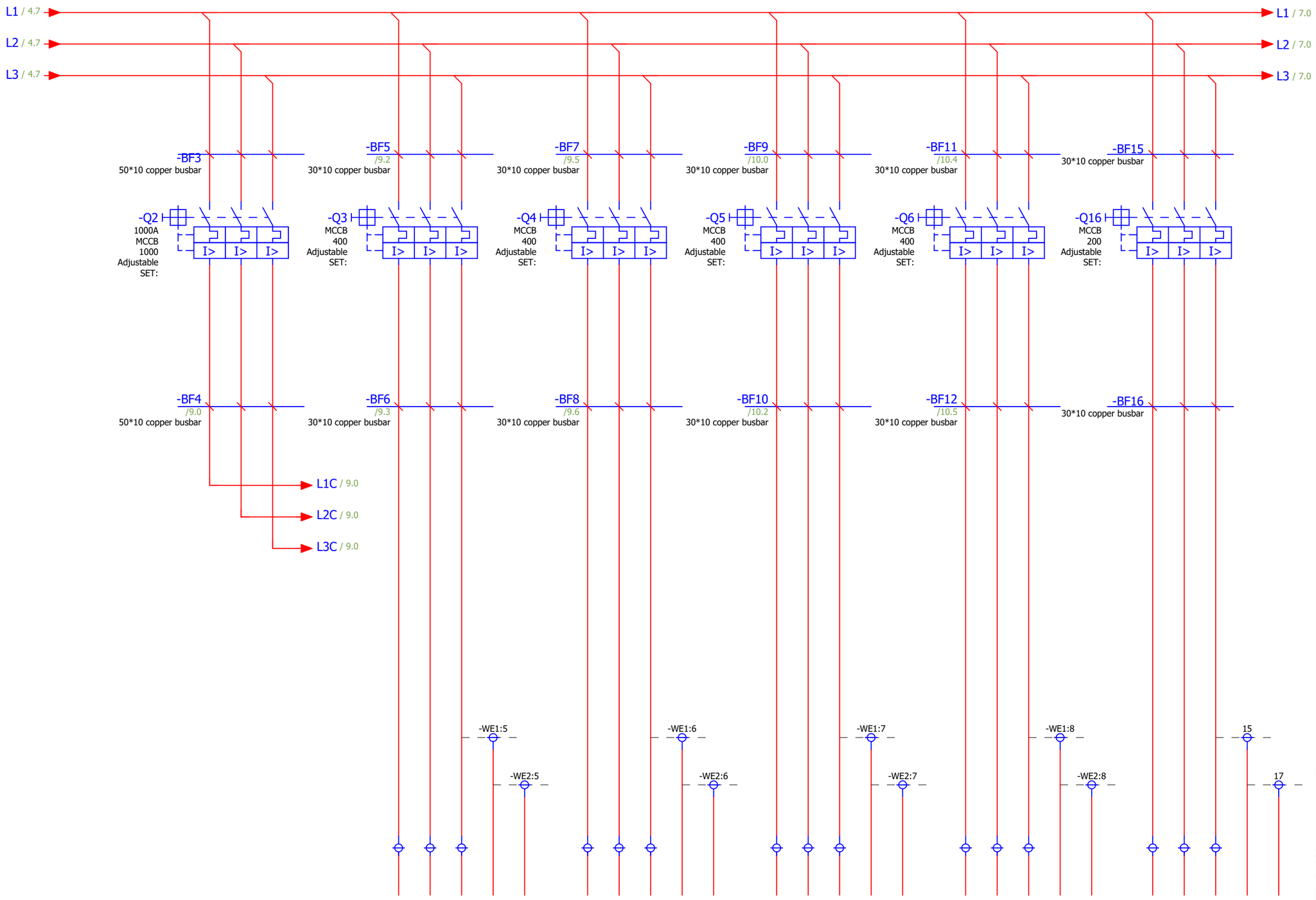

FEEDER NUMBER	1	2	3	4	5	5.1
FEEDER NAME	-	CHL	CHL	CHL	ATS	SPARE
DESCRIPTION	TO CAP.B	CHILLER-1	CHILLER-2	CHILLER-3	FROM ATS(400 KVA)	-
	-	-	-	-	-	-

REFERENCE DOCUMENTS	DOC No.

NOTES :

LEGEND:

REV.	DATE	DESCRIPTION	PREP.	CHK.	APPR.
01					
00	8/21/2023		SFG	SFG	M.GHAREDAGHI

CLIENT:

SUB CONTRACTOR(S): Bonyan Tablo

DRAWING TITLE:

MAHAN PROJECT

OUTGOING

PREP.: SFG | CHECK.: SFG | APPR.: M.GHAREDAGHI

CONT. JOB No.: | CONT. DWG. No.:

REF. NO.: | SC.:

PANEL NAME

MPB& CB

DOCUMENT No.: | SIZE: A3

PLAN/PRJ/SUB.	UNIT CODE	PHASE	SERIAL NO.	REV.	SHEET NO.
			PR-SA-152-247	00	

REFINERY DOC. NO.	LOCATION	SIZE	CLASS	SERIAL NO.

= H

+ M01

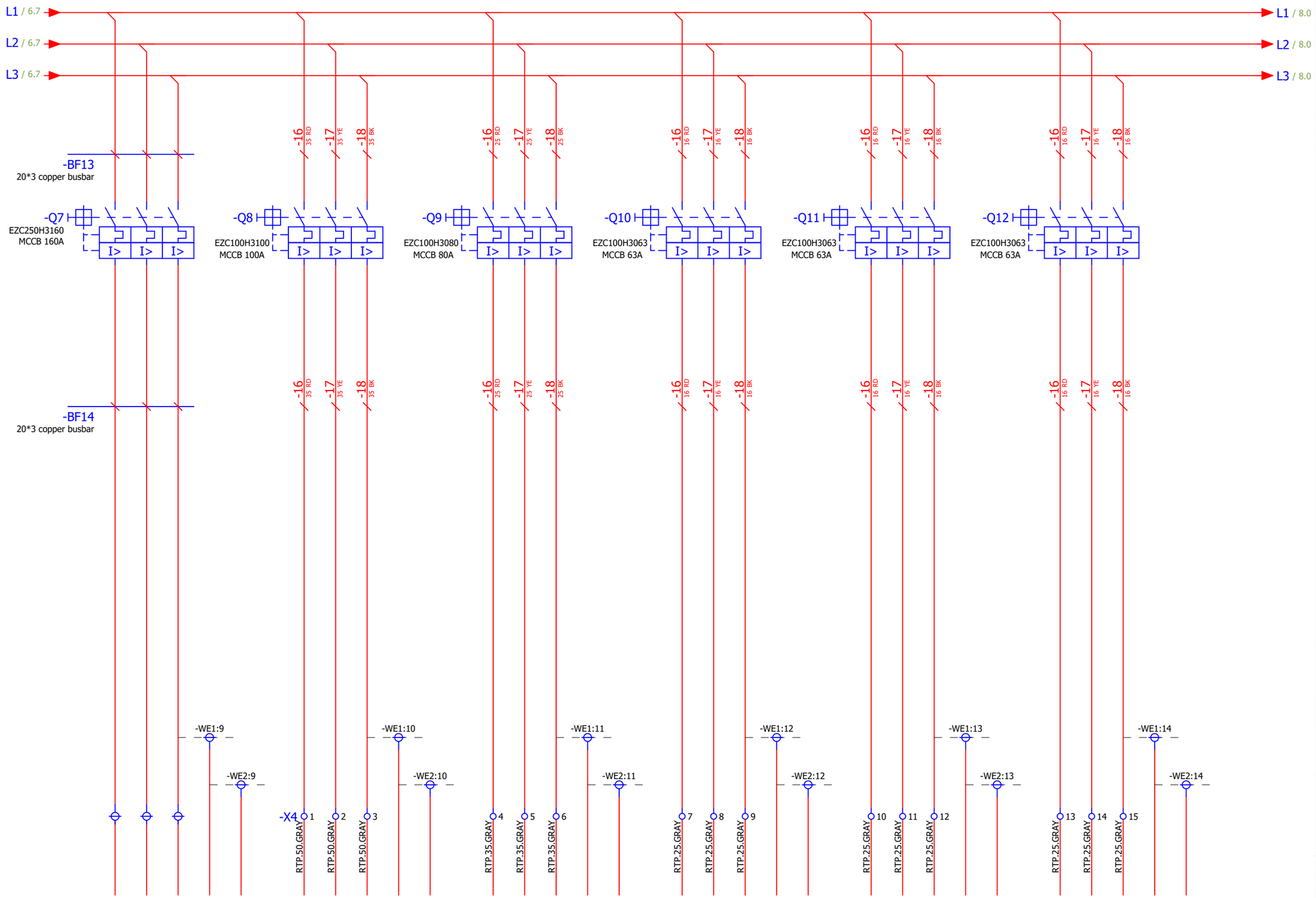

FEEDER NUMBER	1	2	3	4	5	5	
FEEDER NAME	-	-	-	-	-	-	
DESCRIPTION	PB1	PM	PB2	PB3	PB4	PB5	
	-	-	-	-	-	-	

REFERENCE DOCUMENTS	DOC No.

NOTES :

LEGEND:

REV.	DATE	DESCRIPTION	PREP.	CHK.	APPR.
01					
00	8/21/2023		SFG	SFG	M.GHAREDAGHI

CLIENT:

SUB CONTRACTOR(S): Bonyan Tablo

DRAWING TITLE:

MAHAN PROJECT

OUTGOING

PREP.: SFG | CHECK.: SFG | APPR.: M.GHAREDAGHI

CONT. JOB No.: | CONT. DWG. No.:

REF. NO.: | SC.:

PANEL NAME

MPB& CB

DOCUMENT No.: | SIZE: A3

PLAN/PRJ/SUB.	UNIT CODE	PHASE	SERIAL NO.	REV.	SHEET NO.
			PR-SA-152-247	00	

REFINERY DOC. NO.	LOCATION	SIZE	CLASS	SERIAL NO.

= H

+ M01

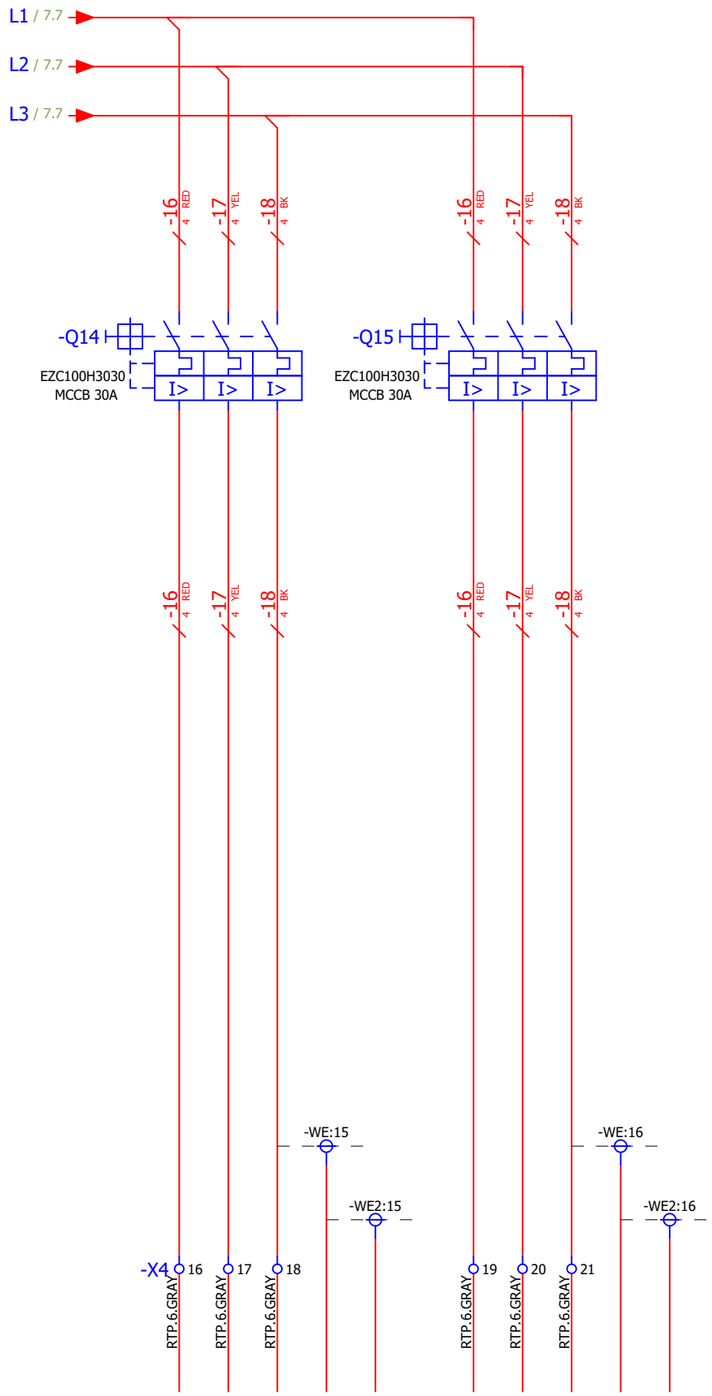

FEEDER NUMBER	1	2
FEEDER NAME	-	-
DESCRIPTION	LV1	LV2
	-	-

REFERENCE DOCUMENTS	DOC No.

NOTES :

LEGEND:

REV.	DATE	DESCRIPTION	PREP.	CHK.	APPR.
01					
00	8/21/2023		SFG	SFG	M.GHAREDAGHI

CLIENT:

SUB CONTRACTOR(S): Bonyan Tablo

DRAWING TITLE:

MAHAN PROJECT

OUTGOING

PREP.: SFG | CHECK.: SFG | APPR.: M.GHAREDAGHI

CONT. JOB No.: | CONT. DWG. No.:

REF. NO.: | SC.:

PANEL NAME: MPB& CB

DOCUMENT No.: | SIZE: A3

PLAN/PRJ/SUB.	UNIT CODE	PHASE	SERIAL NO.	REV.	SHEET NO.
			PR-SA-152-247	00	

REFINERY DOC. NO.	LOCATION	SIZE	CLASS	SERIAL NO.

= H

+ M01

8/ 254

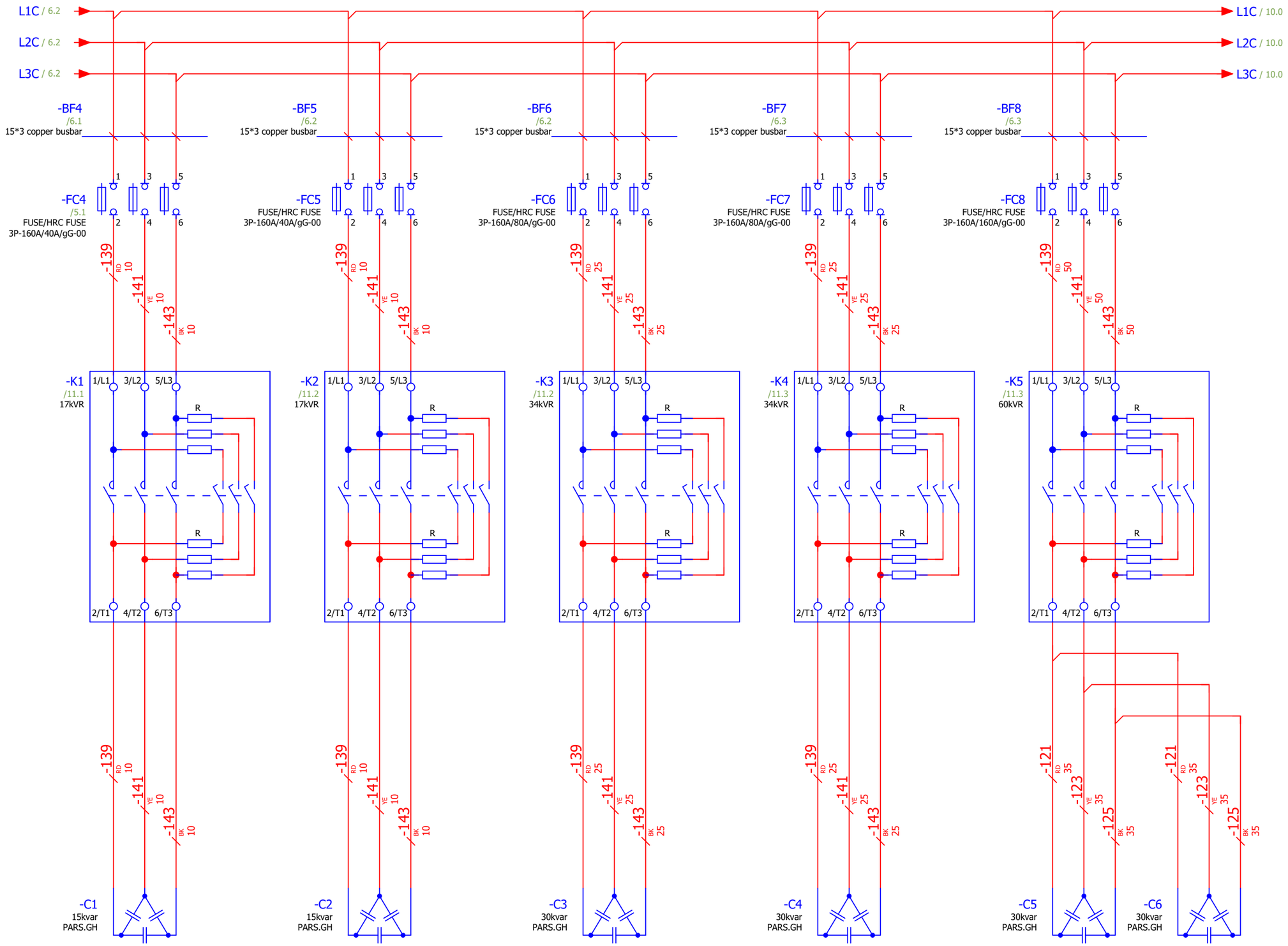

FEEDER NUMBER	STEP 1		STEP 2		STEP 3		STEP 4		STEP 5
FEEDER NAME									
DESCRIPTION	15KAVR		15KAVR		30KAVR		30KAVR		60KAVR
	-		-		-		-		-

REFERENCE DOCUMENTS	DOC No.

NOTES :

LEGEND:

REV.	DATE	DESCRIPTION	PREP.	CHK.	APPR.
01					
00	8/21/2023		SFG	SFG	M.GHAREDAGHI

CLIENT:

SUB CONTRACTOR(S): Bonyan Tablo

DRAWING TITLE:

MAHAN PROJECT

CB

PREP.: SFG | CHECK.: SFG | APPR.: M.GHAREDAGHI

CONT. JOB No.: | CONT. DWG. No.:

REF. NO.: | SC.:

PANEL NAME

MPB& CB

DOCUMENT No.: | SIZE: A3

PLAN/PRJ/SUB.	UNIT CODE	PHASE	SERIAL NO.	REV.	SHEET NO.
			PR-SA-152-247	00	

REFINERY DOC. NO.	LOCATION	SIZE	CLASS	SERIAL NO.

= H

+ M01

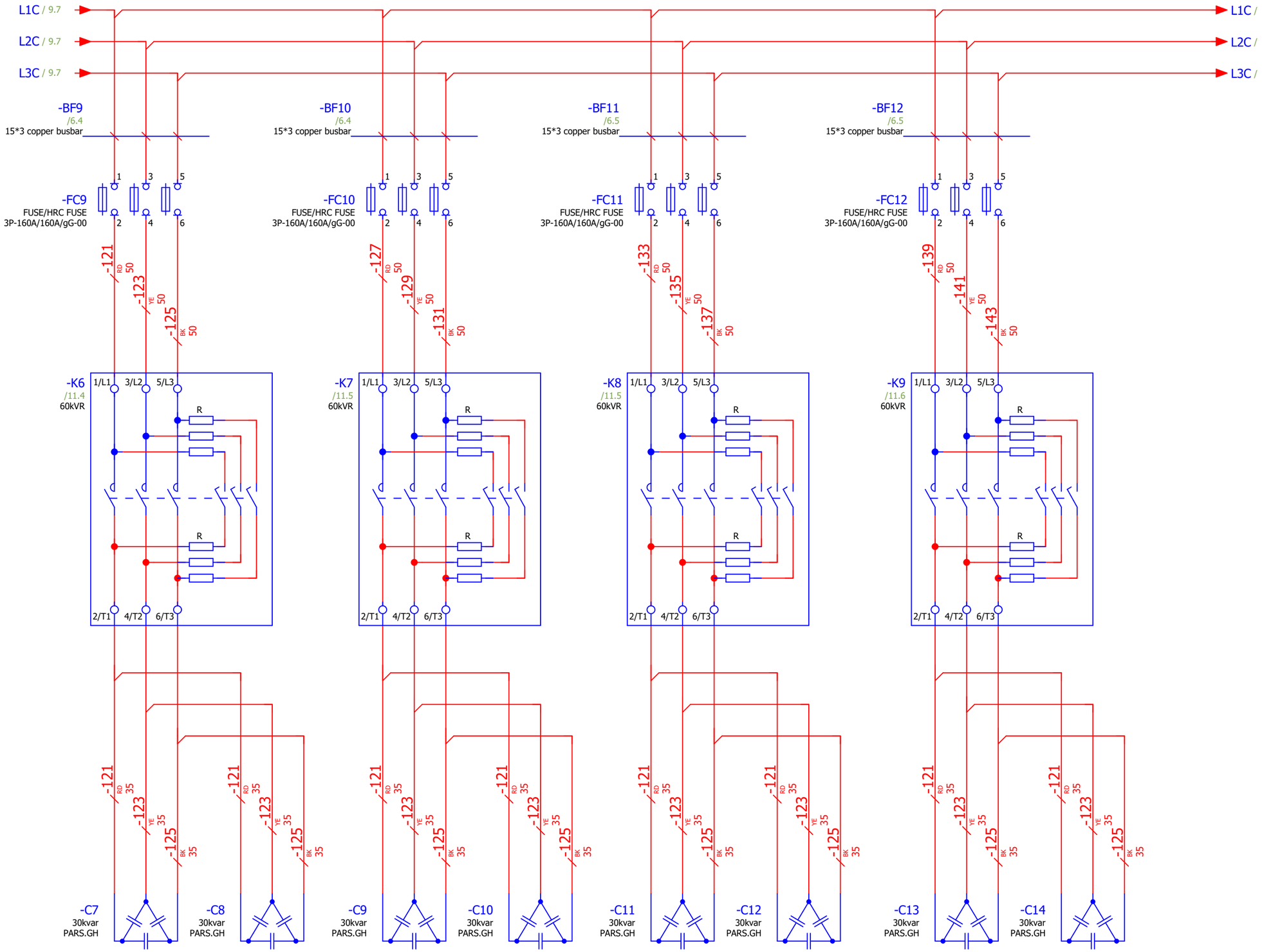

FEEDER NUMBER	STEP 6	STEP 7	STEP 8	STEP 9	
FEEDER NAME					
DESCRIPTION	60KAVR	60KAVR	60KAVR	60KAVR	
	-	-	-	-	

REFERENCE DOCUMENTS	DOC No.

NOTES :

LEGEND:

REV.	DATE	DESCRIPTION	PREP.	CHK.	APPR.
01					
00	6/21/2023		SFG	SFG	M.GHAREDAGHI

CLIENT:

SUB CONTRACTOR(S): Bonyan Tablo

DRAWING TITLE:

MAHAN PROJECT

CB

PREP.: SFG | CHECK.: SFG | APPR.: M.GHAREDAGHI

CONT. JOB No.: | CONT. DWG. No.:

REF. NO.: | SC.:

PANEL NAME

MPB& CB

DOCUMENT No.: | SIZE: A3

PLAN/PRJ/SUB.:	UNIT CODE	PHASE	SERIAL NO.:	REV.:	SHEET NO.
			PR-SA-152-247	00	

REFINERY DOC. NO.	LOCATION	SIZE	CLASS	SERIAL NO.

= H

+ M01

10/ 254

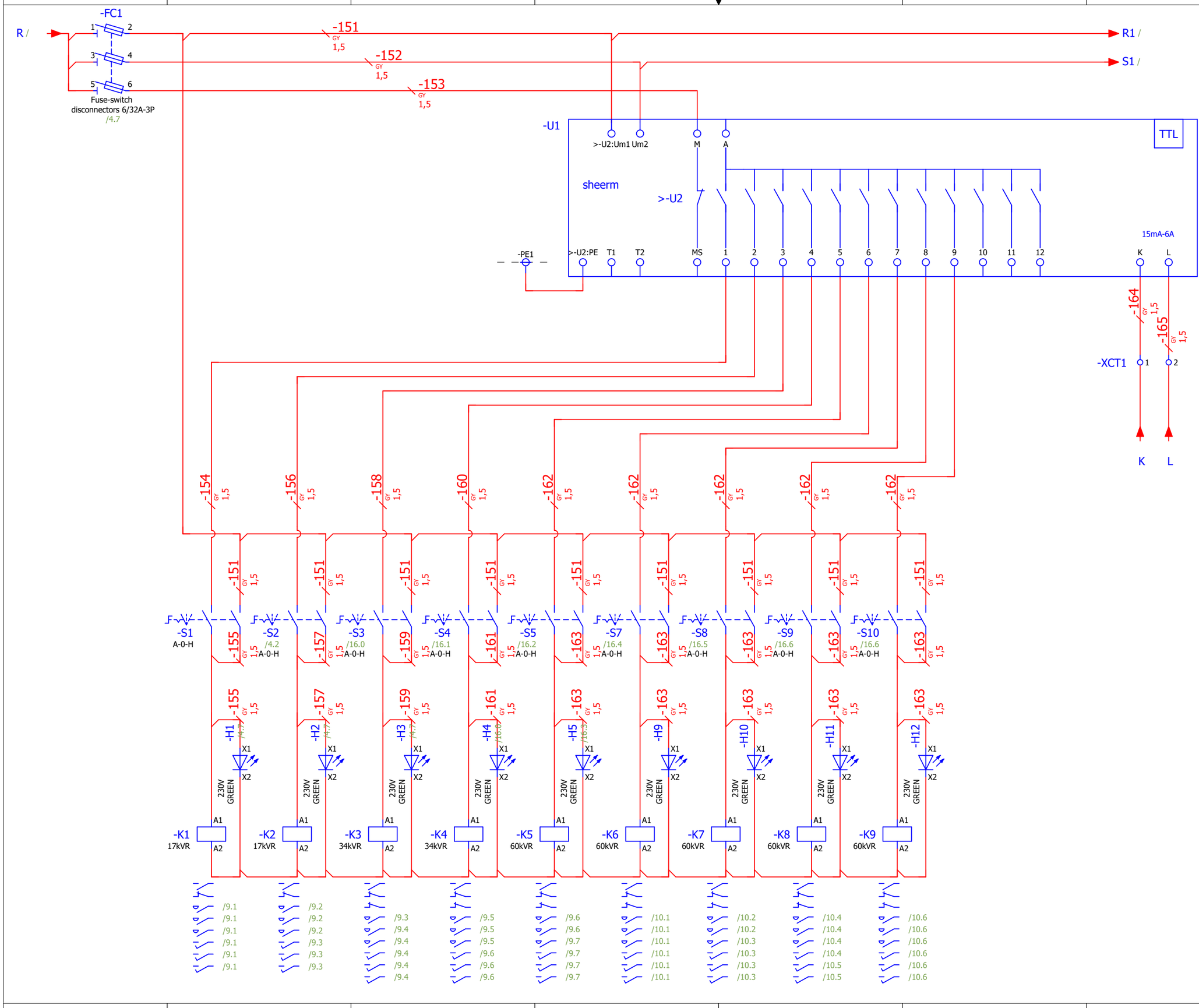

REFERENCE DOCUMENTS	DOC No.

NOTES :

LEGEND:

REV.	DATE	DESCRIPTION	PREP.	CHK.	APPR.
01					
00	8/21/2023		SFG	SFG	M.GHAREDAGHI

CLIENT:

SUB CONTRACTOR(S): Bonyan Tablo

DRAWING TITLE:

MAHAN PROJECT

CB

PREP.: SFG | CHECK.: SFG | APPR.: M.GHAREDAGHI

CONT. JOB No.: | CONT. DWG. No.:

REF. NO.: | SC.:

PANEL NAME

MPB& CB

DOCUMENT No.: | SIZE: A3

PLAN/PRJ/SUB.	UNIT CODE	PHASE	SERIAL NO.	REV.	SHEET NO.
			PR-SA-152-247	00	

REFINERY DOC. NO.	LOCATION	SIZE	CLASS	SERIAL NO.

= H

+ M01

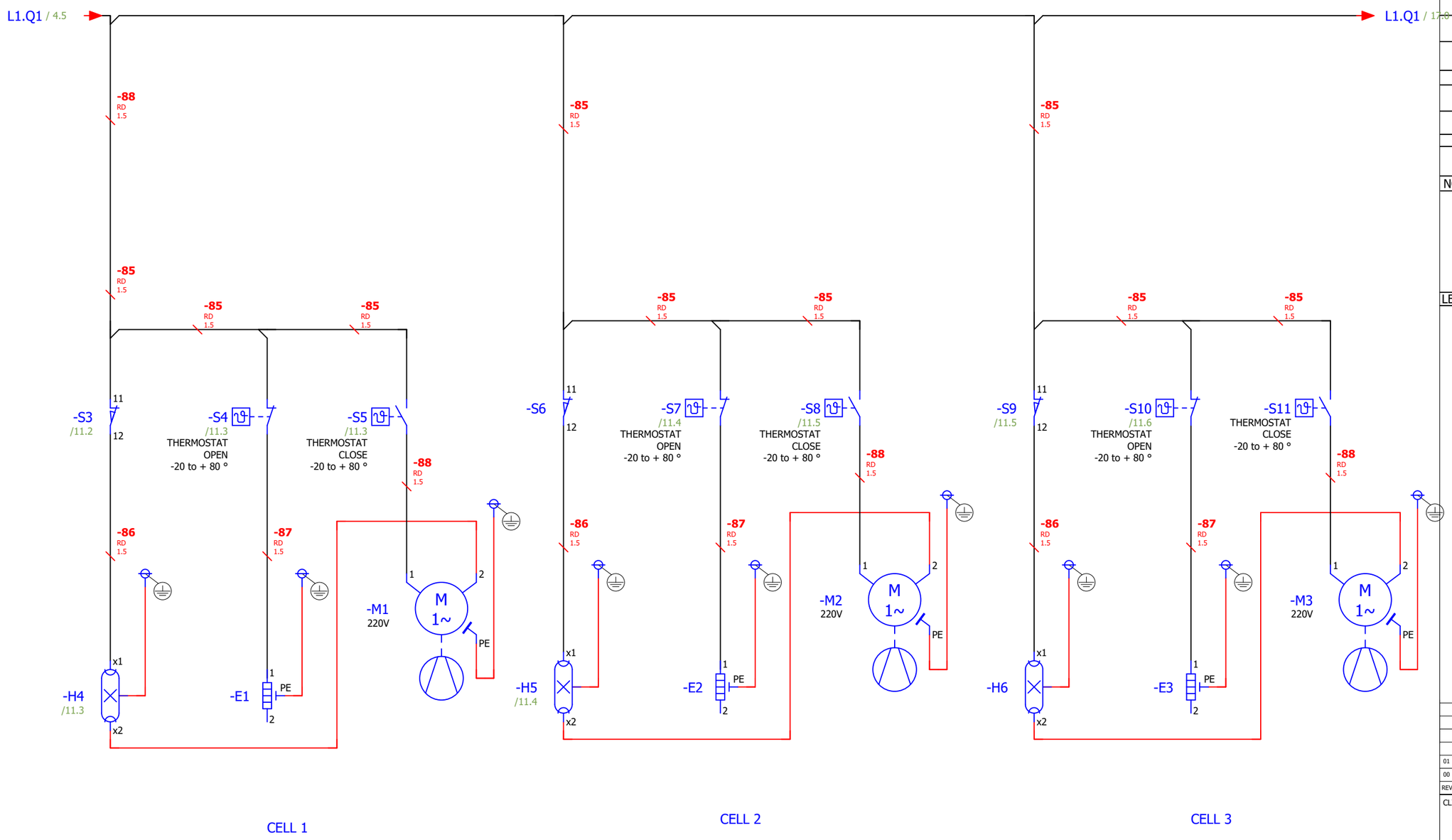

REFERENCE DOCUMENTS	DOC No.

NOTES :

LEGEND:

REV.	DATE	DESCRIPTION	PREP.	CHK.	APPR.
01					
00	8/21/2023		SFG	SFG	M.GHAREDAGHI

CLIENT:

SUB CONTRACTOR(S): Bonyan Tablo

DRAWING TITLE:

MAHAN PROJECT

LIGHTING

PREP.: SFG	CHECK.: SFG	APPR.: M.GHAREDAGHI

CONT. JOB No.: | CONT. DWG. No.:

REF. NO.: | SC.:

PANEL NAME: MPB& CB

DOCUMENT No.: | SIZE: A3

PLAN/PRJ/SUB.:	UNIT CODE	PHASE	SERIAL NO.:	REV.:	SHEET NO.
			PR-SA-152-247	00	

REFINERY DOC. NO.	LOCATION	SIZE	CLASS	SERIAL NO.

= H

+ M01

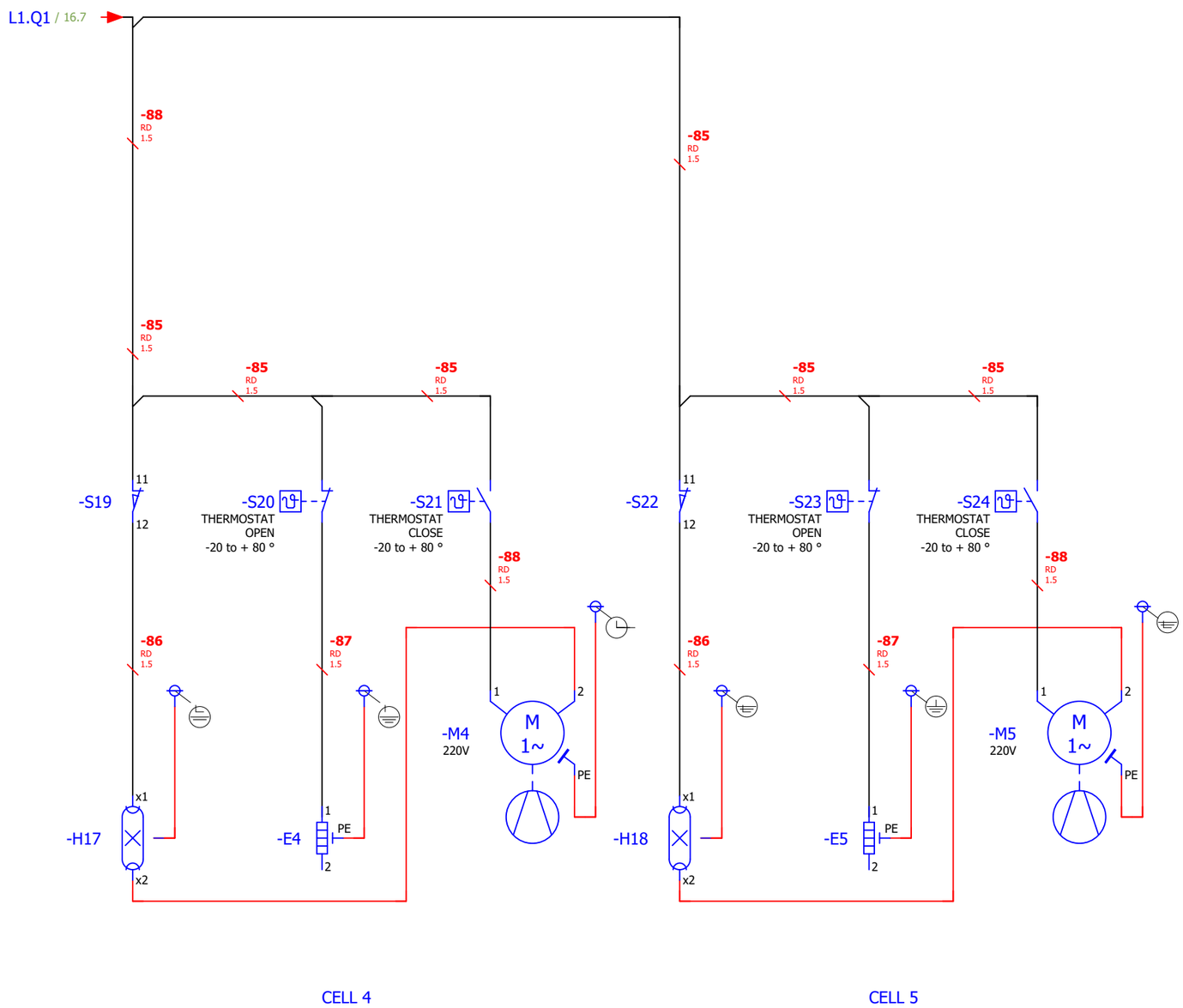

REFERENCE DOCUMENTS	DOC No.

NOTES :

LEGEND:

REV.	DATE	DESCRIPTION	PREP.	CHK.	APPR.
01					
00	8/21/2023		SFG	SFG	M.GHAREDAGHI

CLIENT:

SUB CONTRACTOR(S): Bonyan Tablo

DRAWING TITLE:

MAHAN PROJECT

LIGHTING

PREP.: SFG	CHECK.: SFG	APPR.: M.GHAREDAGHI

CONT. JOB No.: | CONT. DWG. No.:

REF. NO.: | SC.:

PANEL NAME: MPB& CB

DOCUMENT No.: | SIZE: A3

PLAN/PRJ/SUB.:	UNIT CODE	PHASE	SERIAL NO.:	REV.:	SHEET NO.
			PR-SA-152-247	00	

REFINERY DOC. NO.	LOCATION	SIZE	CLASS	SERIAL NO.

= H

+ M01

SCHEMATIC MULTI-LINE
MP& CB
QTY=1PCS

REFERENCE DOCUMENTS	DOC No.

NOTES :

LEGEND:

REV.	DATE	DESCRIPTION	PREP.	CHK.	APPR.
01					
00	8/21/2023		SFG	SFG	M.GHAREDAGHI

CLIENT:

SUB CONTRACTOR(S): Bonyan Tablo

DRAWING TITLE:

MAHAN PROJECT

Title page / cover sheet

PREP.: SFG | CHECK.: SFG | APPR.: M.GHAREDAGHI

CONT. JOB No.: | CONT. DWG. No.:

REF. NO.: | SC.:

PANEL NAME: MPB& CB

DOCUMENT No.: | SIZE: A3

PLAN/PRJ/SUB.:	UNIT CODE	PHASE	SERIAL NO.:	REV.:	SHEET NO.
			PR-SA-152-247	00	

REFINERY DOC. NO.	LOCATION	SIZE	CLASS	SERIAL NO.

= H1

+ M01

179/ 254

GENERAL SPECIFICATION

1) ELECTRICAL CHARACTERISTICS

VOLTAGE :

SERVICE : 400VAC RATED : 690V POWER FREQUENCY : 50HZ IMPULSE : 8KV

NOMINAL CURRENT (A) : 1800A

NOMINAL FREQUENCY (HZ) : 50

RATED BREAKING CAPACITY (KA) : <50 kA

NUMBER OF PHASES : 3PH+N+PE

NUMBER OF POLE : 3P

NEUTRAL DISTRIBUTION : ☐ WITHOUT ☐ EQUAL TO PHASE ▨ HALF OF PHASE

BUSBAR SIZE: PHASE : 80*10 II NEUTRAL : 80X10 m EARTH : 80X10m

BUSBAR CODE : L1: RED L2: YELLOW L3: BLUE N:BLACK PE:YELLOW/GREEN

BUSBAR COAT :

JUNCTION POINT : ▨ NOTHING ☐ TIN ☐ SILVER

BUSBAR LENGTH : ▨ NOTHING ☐ TIN ☐ SILVER ☐ EPOXY POWDER

BUSBAR INSULATION

HORIZONTAL : ☐ AIR ☐ RESIN ▨ COLOR HEAT SHRINK

VERTICAL : ☐ AIR ☐ RESIN ▨ COLOR HEAT SHRINK

VOLTAGE CONTROL SUPPLAY AND SOURCE: ▨ INT. ☐ EXT.

INCOMING :	220V	▨ AC	☐ DC	▨ INSIDE	☐ OUTSIDE
OUTGOING :	220V	▨ AC	☐ DC	▨ INSIDE	☐ OUTSIDE
PROTECTION :	220V	▨ AC	☐ DC	▨ INSIDE	☐ OUTSIDE
INTERLOCKING :	220V	☐ AC	☐ DC	☐ INSIDE	☐ OUTSIDE
SIGNALING :	220V	▨ AC	☐ DC	▨ INSIDE	☐ OUTSIDE

CONTROL WIRE CROSS SECTION

CONTROL : 1.5 mm^2 CURRENT : 2.5 mm^2 PT WIRING: --------

WIRING COLOR CODE: 220VAC: GRY

2) PANEL SPECIFICATIONS

TYPE OF PANEL : ☐ WITHDRAWABLE ▨ FIX ☐ MV ▨ LV

DIMENSION : HEIGHT :2100 mm DEPTH : 800 mm WIDTH :3500 mm

CUBICLES NO. & TYPE : 4 Cubicle DETAIL : FREE STANDING

PROTECTION DEGREE : IP43

TYPE OF CIRCUIT BREAKER : ▨ ACB ▨ MCB ▨ MCCB

TYPE OF CONNECTION :	▨ FRONT	☐ REAR
GLAND PLATE :	▨ YES	☐ NO
CABLE GLAND :	☐ YES	▨ NO
INCOMING CONNECTION BY :	▨ CABLE	☐ BUS DUCT
OUTGOING CONNECTION BY :	▨ CABLE	☐ BUS DUCT
INCOMING CABLE CONNECTION :	☐ TOP	▨ BOTTOM
OUTGOING CABLE CONNECTION :	☐ TOP	▨ BOTTOM

MATERIAL STRUCTURE

BODY :	▨ PAINTED STEEL	☐ GALVANIZED
DOOR AND COVER :	▨ PAINTED STEEL	☐ GALVANIZED
PAINT:	RAL 7035	
HEATER AND THERMOSTAT :	▨ YES (230V AC)	☐ NO
LIGHTING :	▨ YES (230V AC)	☐ NO

3) SITE CONDITION

HUMIDITY : ALTITUDE : MAX. TEMPRATURE : 35° C

REFERENCE DOCUMENTS	DOC No.

NOTES :

LEGEND:

REV.	DATE	DESCRIPTION	PREP.	CHK.	APPR.
01					
00	8/21/2023		SFG	SFG	M.GHAREDAGHI

CLIENT:

SUB CONTRACTOR(S): Bonyan Tablo

DRAWING TITLE: MAHAN PROJECT

GENERAL SPECIFICATION

PREP.: SFG CHECK.: SFG APPR.: M.GHAREDAGHI

CONT. JOB No.: CONT. DWG. No.:

REF. NO.: SC.:

PANEL NAME: MPB& CB

DOCUMENT No.: SIZE: A3

PLAN/PRJ/SUB.:	UNIT CODE	PHASE	SERIAL NO.:	REV.:	SHEET NO.
			PR-SA-152-247	00	

REFINERY DOC. NO.	LOCATION	SIZE	CLASS	SERIAL NO.

= H1

+ M01 180/ 254

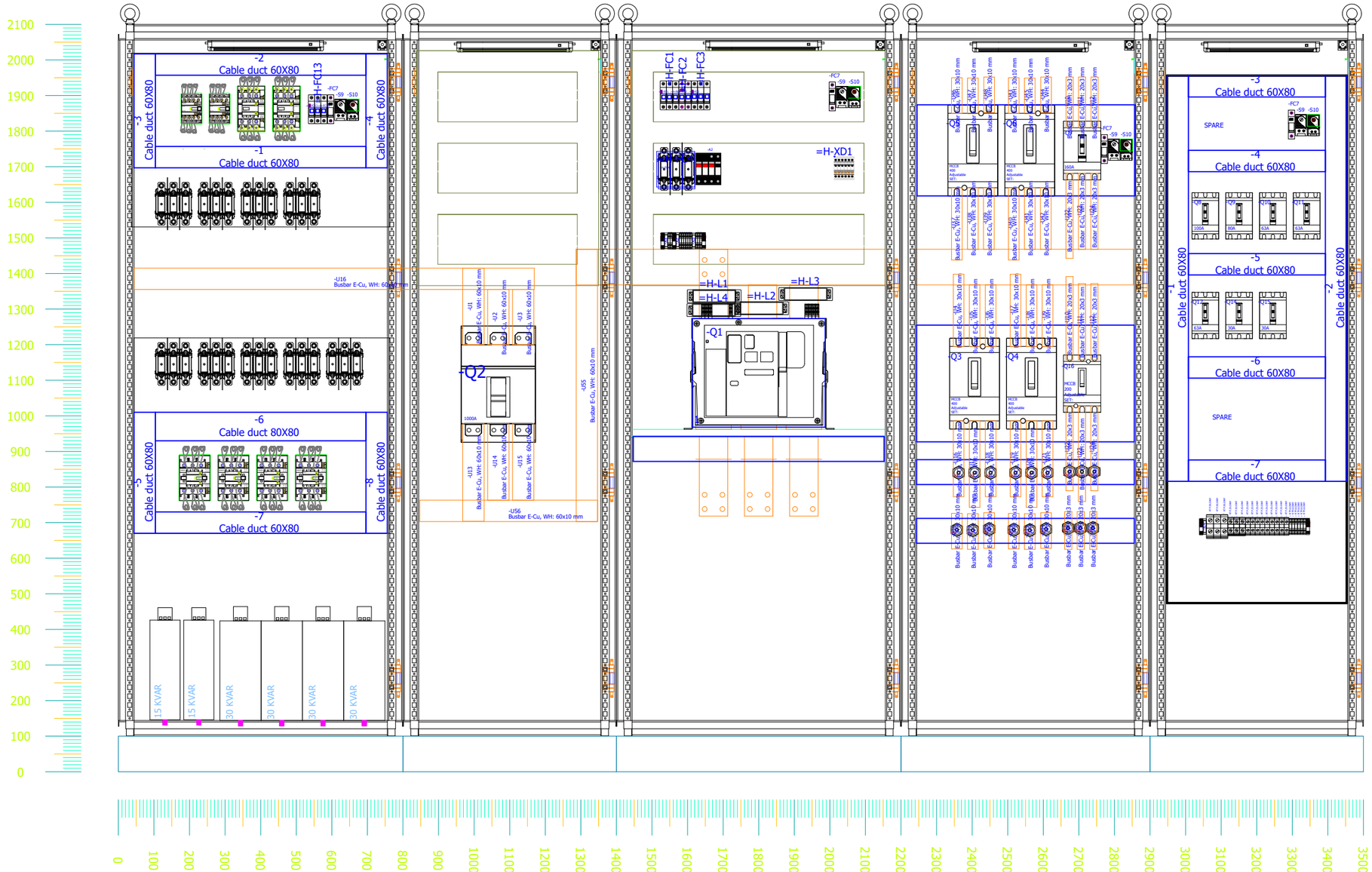

Front View

REFERENCE DOCUMENTS	DOC No.

NOTES :

LEGEND:

REV.	DATE	DESCRIPTION	PREP.	CHK.	APPR.
01					
00	8/21/2023		SFG	SFG	M.GHAREDAGHI

CLIENT:

SUB CONTRACTOR(S): Bonyan Tablo

DRAWING TITLE:

MAHAN PROJECT

LAYOUT

PREP.: SFG	CHECK.: SFG	APPR.: M.GHAREDAGHI

CONT. JOB No.: | CONT. DWG. No.:

REF. NO.: | SC.:

PANEL NAME: MPB& CB

DOCUMENT No.: | SIZE: A3

PLAN/PRJ/SUB.:	UNIT CODE	PHASE	SERIAL NO.:	REV.:	SHEET NO.
			PR-SA-152-247	00	

REFINERY DOC. NO.	LOCATION	SIZE	CLASS	SERIAL NO.

= H1

+ M01

181/ 254

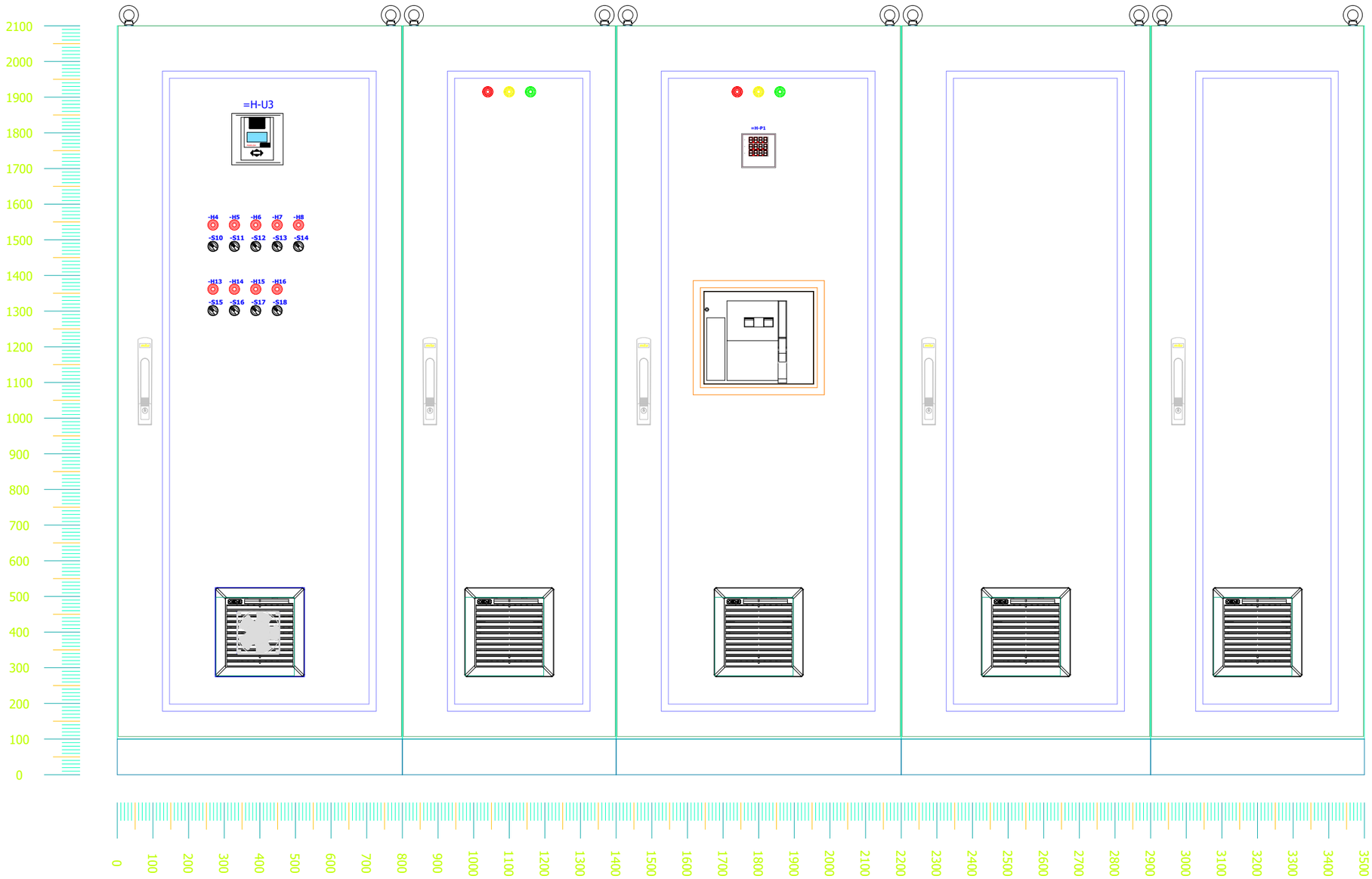

Front View

REFERENCE DOCUMENTS	DOC No.

NOTES :

LEGEND:

REV.	DATE	DESCRIPTION	PREP.	CHK.	APPR.
01					
00	8/21/2023		SFG	SFG	M.GHAREDAGHI

CLIENT:

SUB CONTRACTOR(S): Bonyan Tablo

DRAWING TITLE:

MAHAN PROJECT

LAYOUT

PREP.: SFG | CHECK.: SFG | APPR.: M.GHAREDAGHI

CONT. JOB No.: | CONT. DWG. No.:

REF. NO.: | SC.:

PANEL NAME: MPB& CB

DOCUMENT No.: | SIZE: A3

PLAN/PRJ/SUB.:	UNIT CODE	PHASE	SERIAL NO.:	REV.:	SHEET NO.
			PR-SA-152-247	00	

REFINERY DOC. NO.	LOCATION	SIZE	CLASS	SERIAL NO.

= H1

+ M01

182/ 254